Nov. 2026

Obsolete product

Intelligent recorder
M252B

Recommended substitute product

Intelligent recorder
MD252

■ Obsolete date: End of January 2026

■ Difference to recommended substitute product

Product appearance	Outside dimension	Mounting dimension	Product performance	Setting method	Power supply
☆	☆	◎	↑	○	☆ AC100V → DC24V

◎ : Full compatible, ↑ : Performance improved, ○ : Almost no change, ☆ : Large change

■ Product appearance

Obsolete product: M252B	Recommended substitute product: MD252
	

■ Outside dimension

Obsolete product: M252B

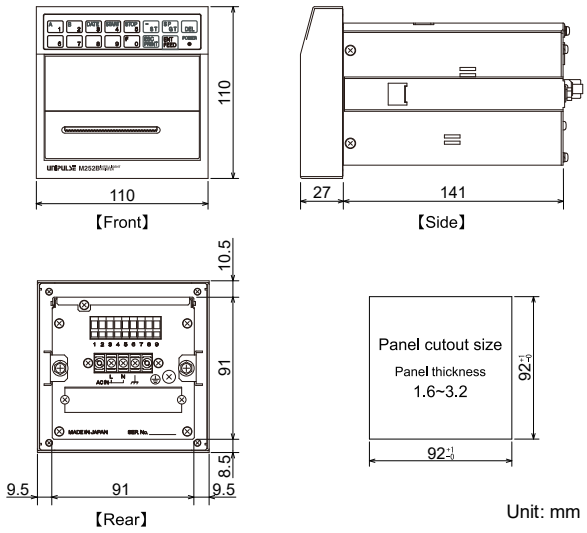

Recommended substitute product: MD252

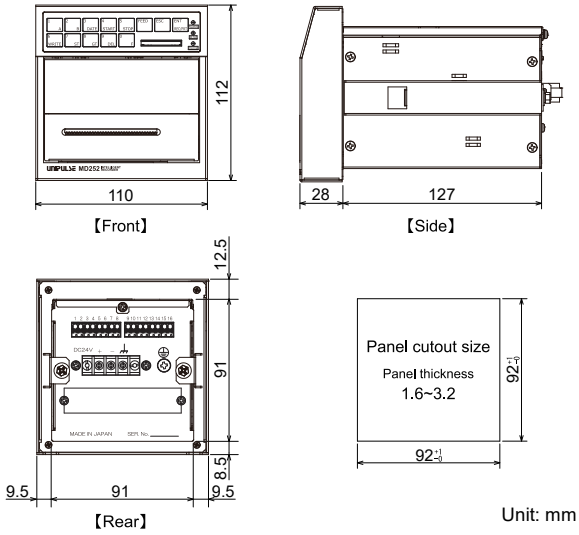

■ Specification < Differences >

		Obsolete product: M252B	Recommended substitute product: MD252
Setting section	Settings		The following items are added: Thining Count Ach, Thining Count Bch Data Format Code Source Write Mode Over Write Error Input Option Table Max Count GT Timer ON/OFF GT Timer Set Both Mode Invert Mode Card Info Code Ach Load, Code Bch Load Setting Load Code Ach Save, Code Bch Save Setting Save SD Log Setting Card Format
Main functions	Printing/recording method	- Print with the [PRINT] key - Print by print command input (PRINT terminal) - Print by automatic print command input (SI/F, RS-232C) - Automatic print by interval setting	- Print/record with the [REC/PRT] key - Print/record by external input signals (REC terminal) - Print/record by automatic print command input (SI/F, RS-232C) - Automatic print/record by interval setting
	Printing/recording data	Printing of each item only	Printing/recording each item The following items are added: Frequency Distribution (print only), Error, Over
	Functions		The following item is added: Both record
External input signals	Rear terminal block	(1) COM, (2) FEED, (3) PRINT, (4) ST, (5) GT Connector: WAGO 5pin	Ach: (1) COM, (2) REC, (3) WRITE, (4) ST, (5) GT, (6) FEED Bch: (9) COM, (10) REC, (11) WRITE, (12) ST, (13) GT, (14) ERROR Connector: WAGO 8pin×2
Interface	Rear terminal block	(6-7) SI/F-Ach, (8-9) SI/F-Bch	(7-8) SI/F-Ach, (15-16) SI/F-Bch
	SD card slot	— (None)	Usable cards FAT32 (FAT16 for the SD card of 2GB or less) File format Text file (CSV format) Writing of the internal record data, saving and restoring of all the setting values and the codes tables are possible.
General Performance	AC power supply	Power supply voltage AC 100 to 240 V (+10%, -15%) Power consumption 20 W typ. Inrush current 30 A (2 msec): AC 100 V Average load condition 60 A (2 msec): AC 200 V Average load condition	— (None)
	DC power supply	— (None)	Power supply voltage DC 24 V ± 15% Power consumption 20 W Inrush current (ordinary temperature, at cold-start time) 4 A (700 µsec typ.)
	Operating conditions	Operating temperature range: 0 to +40 ℃ Storage temperature range: -20 to +70 ℃	Operating temperature range: -10 to +50 ℃ Storage temperature range: -20 to +85 ℃
	Dimensions	110W×110H×168D mm (not including projections)	110W×112H×155D mm (not including projections)
	Weight	Approx. 1.8 kg	Approx. 1.5 kg